MODEL	HONDA CRF 1000 L AFRICA TWIN	YEAR	2016	SCHEMATIC
LINE	SPORT	MUFFLER	OVAL CARBON CAP	

ELENCO PARTI / PARTS LIST

#	QTÀ / QTY	DESCRIZIONE / DESCRIPTION	CODICE / CODE
1	1	DB killer / DB killer	50.DK.020.0
2	1	Tappo in gomma / Rubber stopper	50.73.266.1
3	1	Silenziatore / Muffler (L. 400)	OVAL CARBON CAP
4	1	Protezione in gomma per staffa / Rubber protection for bracket	50.73.041.1
5	1	Staffa / Bracket	50.SS.002.0
6	1	Vite M8x30 / Screw M8x30	50.73.219.1
7	1	Rondella in alluminio / Aluminium washer	50.73.063.1
8	1	Distanziale in alluminio / Aluminium spacer (Øe.30 Øi.8,5 h.10)	50.SS.645.1
9	1	Dado M8 flangiato / Flanged nut M8	50.73.393.1
10	1	Staffa / Bracket	50.SS.963.0
11	1	Rondella in alluminio nera / Black aluminium washer	50.73.221.1
12	1	Vite M8x25 / Screw M8x25	50.73.064.1
13	1	Tubo di raccordo / Link pipe	9773H059SE
14	1	Fascetta Ø 48/51 mm / Pipe clamp Ø 48/51 mm	50.FA.007.1
15	1	Fascetta / Pipe clamp	50.73.806.1
16	1	Molla media / Middle spring	50.73.359.1
17	1	Tubo in gomma per molla / Rubber pipe for spring	50.73.210.1

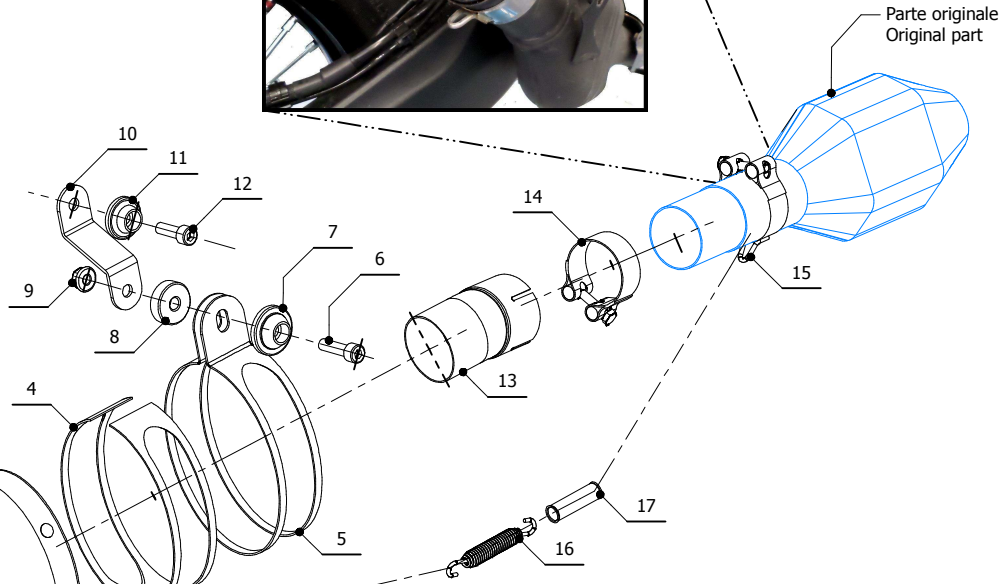

OPTIONAL PARTS
H.059.C1 - NO KAT PIPE

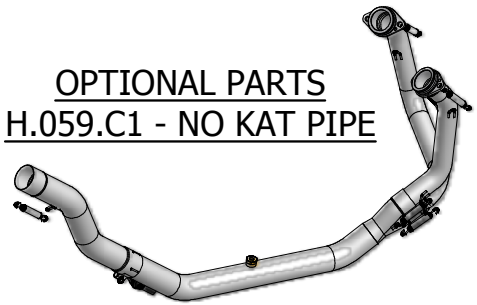

APPLICAZIONI / APPLICATIONS

CODICE / CODE	SILENZIATORE / MUFFLER	TUBO / PIPE	FASCETTA / CLAMP
H.059.LEC H.059.LNC	CARBONIO (COPPA CARBONIO) / CARBON (CARBON CAP) TITANIO (COPPA CARBONIO) / TITANIUM (CARBON CAP)	INOX / ST.STEEL	INOX / ST.STEEL